UncleHu®

20×50 BINOCULARS

INSTRUCTION

02/ Annotation Explanation

1、 Eyepiece Lens
2、 Objective Lens
3、 Eyepiece Cover
4、 Right Eyepiece Focus Wheel
5、 Center-Focus Wheel
6、 Objective Lens Cover
7、 Tripod Interface
8、 Non-slip Rubber

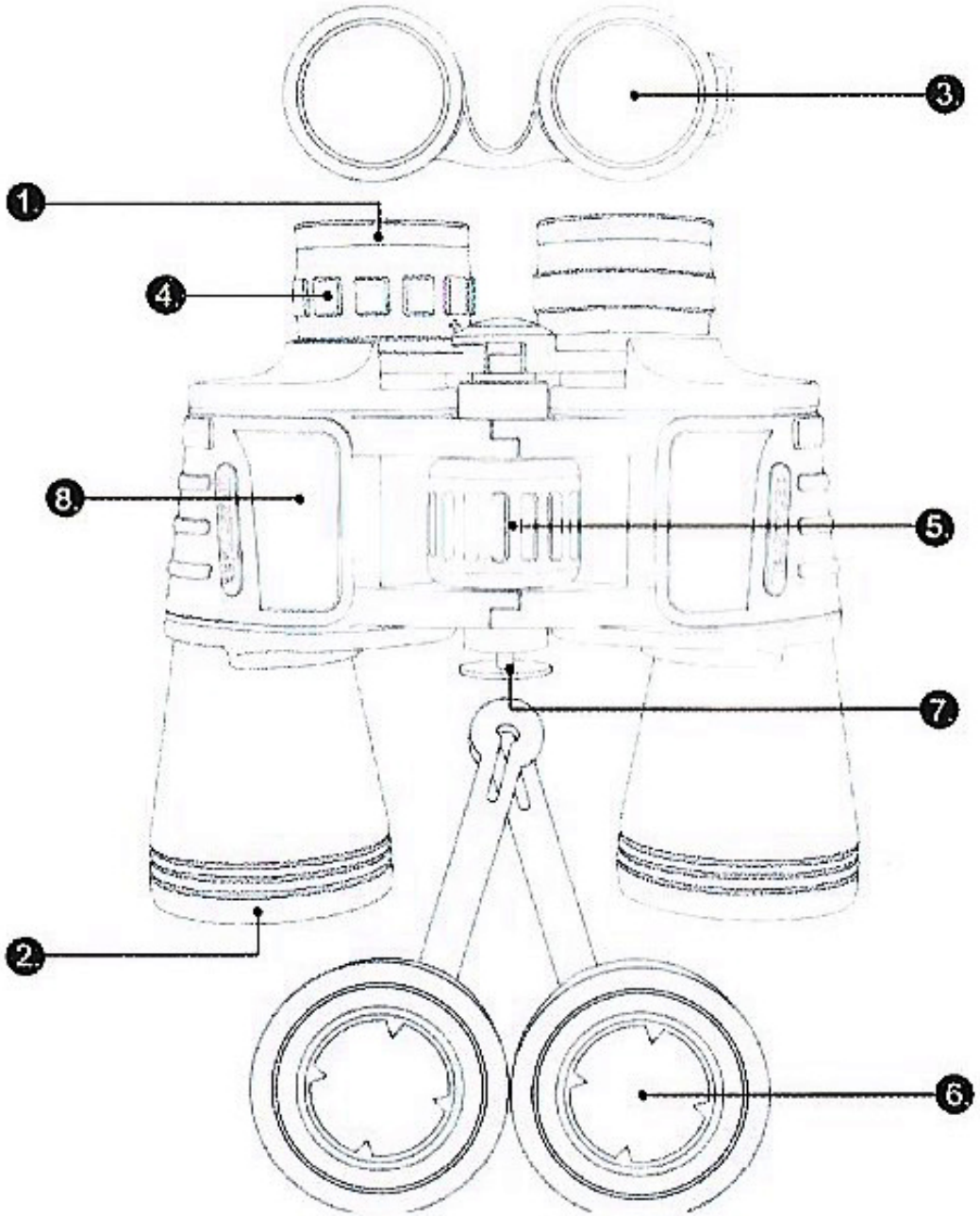

03/ Binoculars Parameters

Magnification:	20x
Type of Prism:	BAK4
Ocular Lens Diameter:	26mm
Objective Lens Diameter:	50mm
Size:	191×66×178mm
Net Weight:	800g
Material:	Plastic+Metal+Glass
Field of View Angle:	8.2°
Field of View Size:	56M/1,000M
Diopter Compensation:	±5D
Focus Mechanism:	Center-Focus Wheel + Right Eyepiece Focus Wheel

04/ Focusing Steps

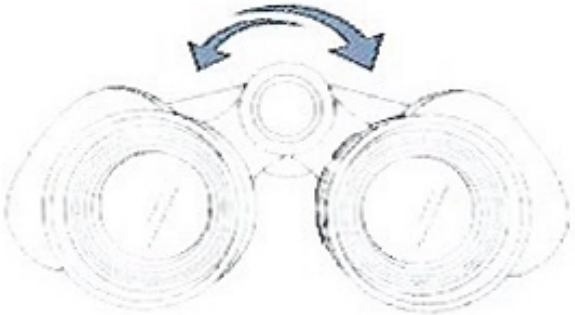

1、Adjust the center focus wheel to obtain a relatively clear view.

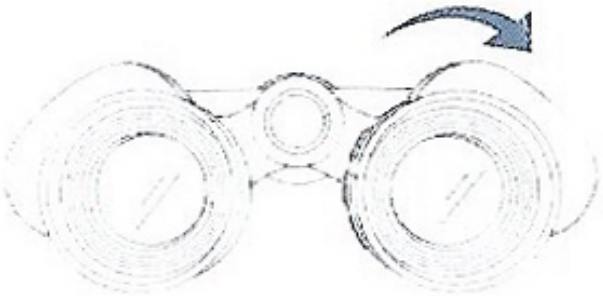

2、Close your left eye and adjust the right eye piece focus wheel to get a clear view of the right eye.

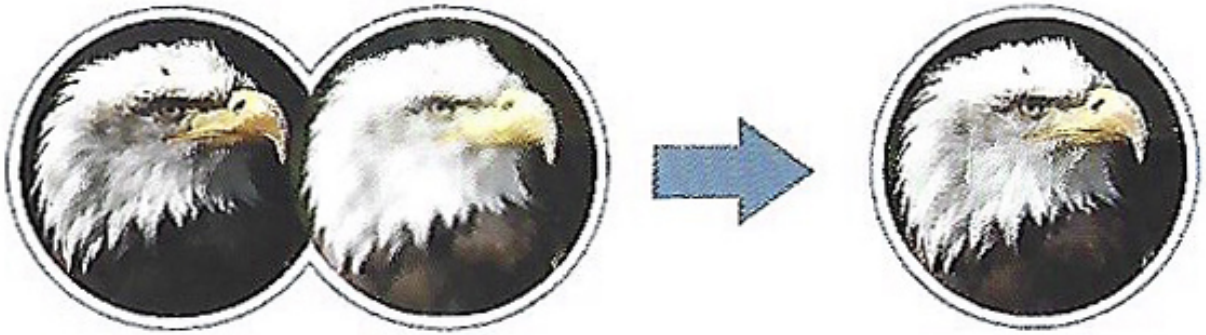

3、Adjust the lens barrel until only a circular field of view can be observed.

05/ Usage Caution

- Do not view the sun or other bright lights with this product. It will cause damage to your eyes.
- Daily waterproof binoculars, but can not be soaked in water.
- Hold binoculars with both hands, easy to shake when held with one hand.
- Avoid touching the lens with your hands or let the lens be scratched by hard objects.

When you cannot use the binoculars to get a clear image, please adjust the focus wheel according to the steps on page 4. If you still cannot get a clear image, please send your order ID and questions to our official mail UncleHu-service@hotmail.com. We are responsible for our products and will do our best to solve the problem for you.

06/ Care and Cleaning

- Avoid banging and dropping. Store in a cool, dry place.
- When not using the binoculars, please put on the eyepiece cover and objective lens cover to avoid dust.
- Blow away any dust or debris on the lens (or use a soft lens brush). Use the included soft lens cloth to clean the lens. Don't wipe the lens with fingers, paper, etc.

The binoculars is a high-precision optical product, please use and store it in the correct way. And it will accompany you through more wonderful time.

07/ After-sales Service

- **Got a pair of broken binoculars, what should I do?**

  Please contact us via Amazon directly to send your order ID and pictures or videos and the problem.

  We're willing to send replacement or refund depending on the situation.

- **I have suggestions or FAQs, who should I contact?**

  Please contact us via our official mail:

  UncleHu-service@hotmail.com

  24 hours online service.

  Customer first is the purpose of our company.

About Us

Thank you for choosing UncleHu. We are a professional optical instrument manufacturing company. Over the years, we have independently developed and produced. The purpose is to manufacture binoculars with excellent optical performance, excellent ergonomic design and sturdy structure.

We hope to provide each customer with a unique observation experience as that to explore and discover is also UncleHu's corporate mission.

At the same time, we also have other professional binoculars. You just need to search "UncleHu binoculars" on Amazon to find us.

Looking forward to meeting you again. Thanks.